TECO	OUTLINE DIMENSIONS 3-PHASE INDUCTION MOTOR	FRAME NO : D100L

POLE	kW	HP	RPM
6	1.5	2	950

Totally Enclosed Fan-Cooled Type, Squirrel-Cage Rotor.

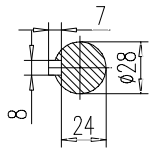

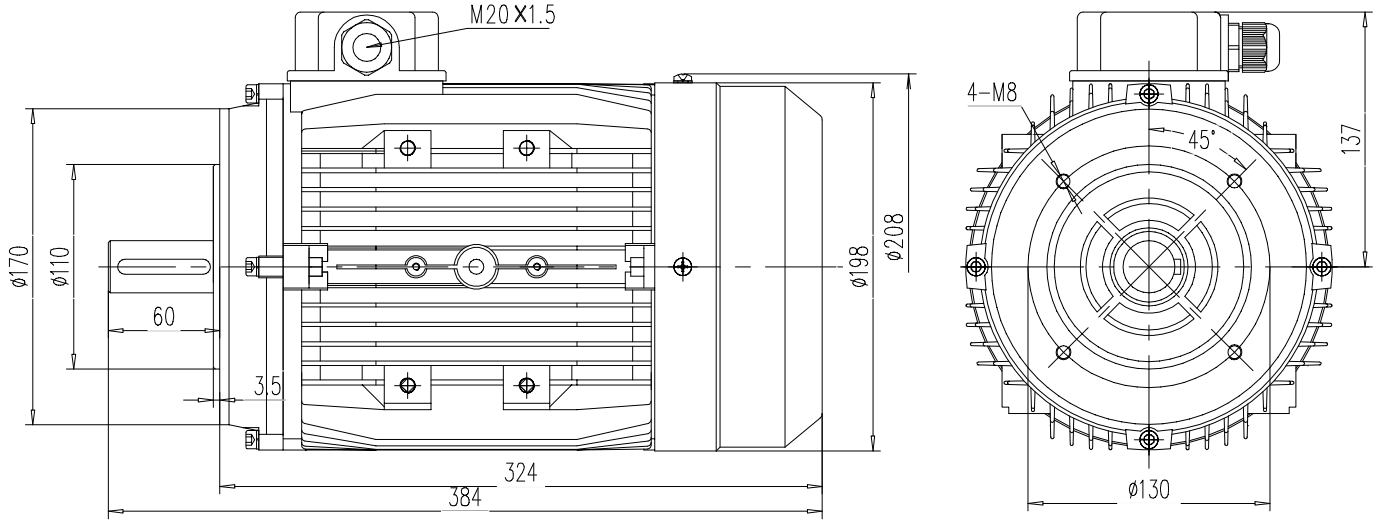

NOTES:
1. FLANGE MOUNTED IM3601.
2. IP55 PROTECTION.

DWN.	LL	25. 07. 25	
CHKD.	DP	25. 07. 25	
APPD.	AN	25. 07. 25	

REV : 00
DWG NO.